CMY荧光镜前灯
CMY Fluorescent Mirror Light

CMY05-1

CMY12-1

4

型号含义 Catalogue Number Logic

CMY □ □ – □

- 灯管数量 Lamp tube number
- 设计序号 Design No.
- 0: 8W 1: 12W
- 船用镜前灯 Marine mirror light

应用场所 Application

- 适用于船舶一般舱室或内走道，如船员居住舱、餐厅、驾驶室、报务室等。
- Applicable in general cabin, inner aisles of ships, such as crew living spaces, restaurants, cabs, and radio rooms, etc.

温度范围 Temperature range

- –25℃~+55℃

选配表 Selection table

型号 Model	功率(W) Power	电压/频率 Voltage / frequency	灯 座 Lamp holder	防护等级 Protection grade	重量(kg) Weight
CMY05–1	8	110V/60Hz 220V/50Hz 220V/60Hz	G5	IP34	2.8
CMY12–1	12			IP22	1.8

外形尺寸 Outline Dimension

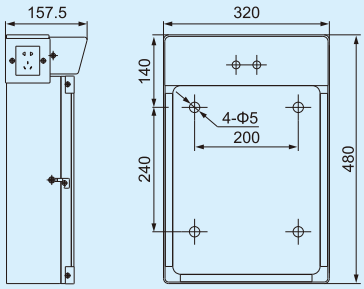

CMY05-1

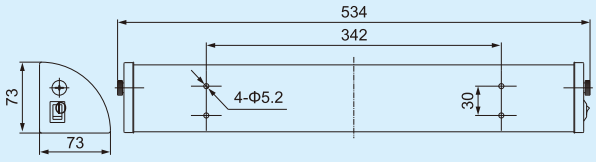

CMY12-1

CTY08 荧光床头灯

CTY08 Fluorescent Bedside Light

CTY08-1C

CTY08-1

型号含义 Catalogue Number Logic

CTY 08 – □ □ □

- S：不锈钢 Stainless steel
- E：集中电源 Centralized power
- C: 带插座 With socket
- 灯管数量 Lamp tube number
- 设计序号 Design No.
- 船用床头灯 Marine bedside light

应用场所 Application

- 适用于船舶一般舱室或内走道，如船员居住舱、餐厅、驾驶室、报务室等。
- Applicable in general cabin, inner aisles of ships, such as crew living spaces, restaurants, cabs, and radio rooms, etc.

温度范围 Temperature range

- –25℃~+55℃

选配表 Selection table

额定电压(V) Rated voltage	防护等级 Protection degree	额定功率(W) Rated power	电缆外径(mm) Cable O.D.	灯 座 Lamp holder	安装方式 Installation	重量(kg) Weight
110、220V AC 50/60Hz	IP34	8	Φ10~Φ14	G5	壁挂式 Wall-type	0.82
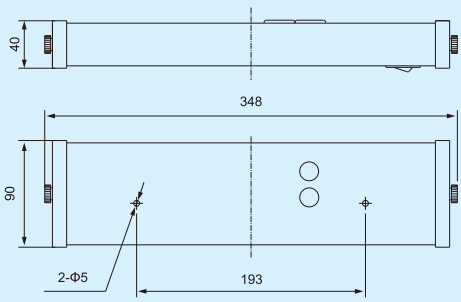
外形尺寸 Outline Dimension